BHS A404N-PSC15-S49
BHS0054

PNP
NO
flush mountable

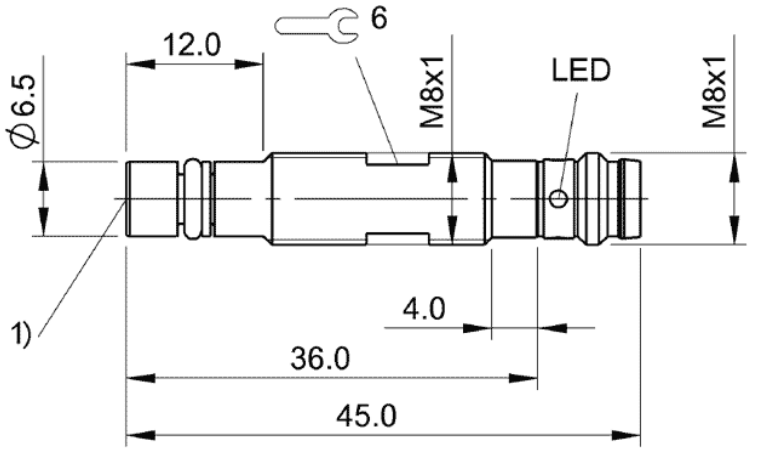


## Electrical data:

| | |
|---|---|
| Load current capacity (Ie) | 100 mA |
| No-load supply current undamped | 7 mA |
| Off-state current max (Ir) | 10 µA |
| Voltage drop max. static | 2,5 V |
| Supply voltage max. (Ub) | 30 V |
| Time delay before availability | 20 ms |
| Hysteresis max (H) | 15 % |
| Operating frequency (f) | 4000 Hz |
| Rated operational voltage (Ue) | 24 DC V |
| Utilization category | DC 13 |
| Ripple max. of Ue | 10 % |
| Supply voltage min. (Ub) | 10 V |
| Connection | Connector S49 (M8) |
| Electrical type | DC |
| Load capacitance max | 0,5 µF |
| No-load supply current damped | 10 mA |
| Switching output | PNP |
| Switching element function | NO |

## General data:

| | |
|---|---|
| Short circuit protected | yes |
| Approval | CE |
| Power Indication | no |
| Degree of protection IP | IP68 per BWN Pr 20 |
| Features | pressure rated to 350 bar |
| Output indication | yes |
| Protected against polarity reversal | yes |

Wiring:

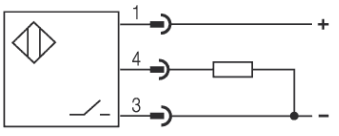


Pinout:

## Mechanical data:

| | |
|---|---|
| Rated operating distance (sn) | 1,5 mm |
| Assured operating distance | 0...1,2 mm |
| Ambient temperature min | -25 °C |
| Number of Wires | 3-wire |
| Ambient temperature max | +80 °C |
| Diameter | M 8x1 mm |
| Temperature drift max. | 10 % |
| Housing material | 1.4104 |
| Repeat accuracy max. (R) | 5 % |
| Mounting | flush mountable |
| Degree of polution | 3 |
| Sensing face material | ZrO2 |