OTV 51 M 150 N3K-IBS
Diffuse Sensor

- Red light clocked
- 4-turn potentiometer
- Bright LED
- Dark-/light switching, push-pull
- Functional reserve indicator/contamination indicator
- Robust metal casing

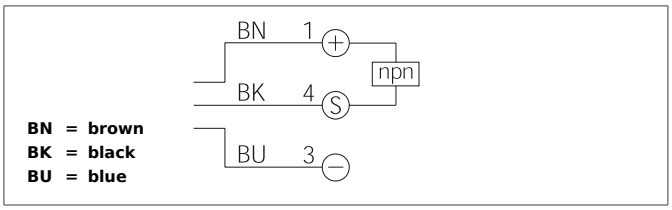

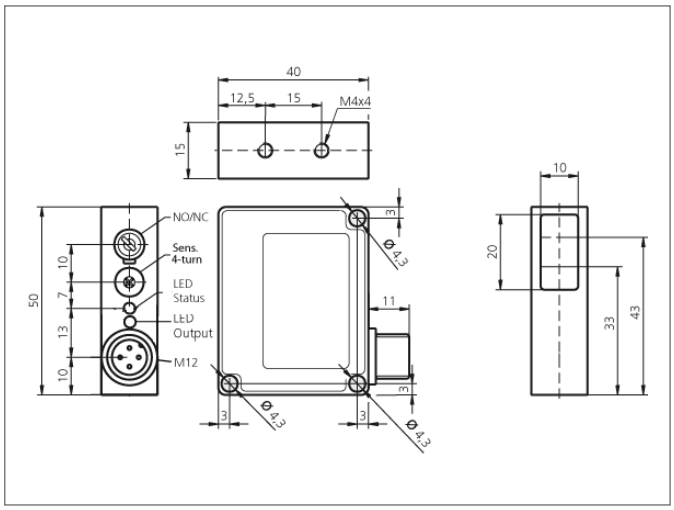

Safety instructions

The Instruments are not to be used for safety applications, in particular applications in which safety of persons depends on proper operation of the instruments.
These instruments shall exclusively be used by qualified personnel.
Repair only by di-soric.

TECHNICAL INFORMATION	+20°C, 24V DC
Evaluation	digital
Size	50 x 40 x 15 mm (Dimensions)
Design	cuboid design
Emitted light	Red, 660 nm, clocked
Standardized measuring plate	200 x 200 mm, white 90 % reflexion
Service voltage	10 ... 35 V DC
background suppression	no
Operating distance	15 ... 150 mm
Output	npn, 200 mA, NO/NC, switchable
Sensitivity adjustment	potentiometer
Internal power consumption	< 40 mA
Voltage drop	< 2,0 V
Operating frequency	1.000 Hz
Response-/release time	< 0,5 ms / < 0,5 ms
Switching hysteresis	< 12 %
Reproducibility	< 1 %
Ambient temperature	-10 ... +60 °C
Temperature drift	0,3 %/K
Ambient light immunity	> 10 kLx
Insulation voltage endurance	500 V
Protection class	IP 67
Casing material	die-cast zinc lacquered finish
Material	polymethyl methacrylate (Window)

OTV 51 M 150 N3K-IBS
Diffuse Sensor

TECHNICAL INFORMATION	+20°C, 24V DC
Connection	Connector, M12, 3-poled